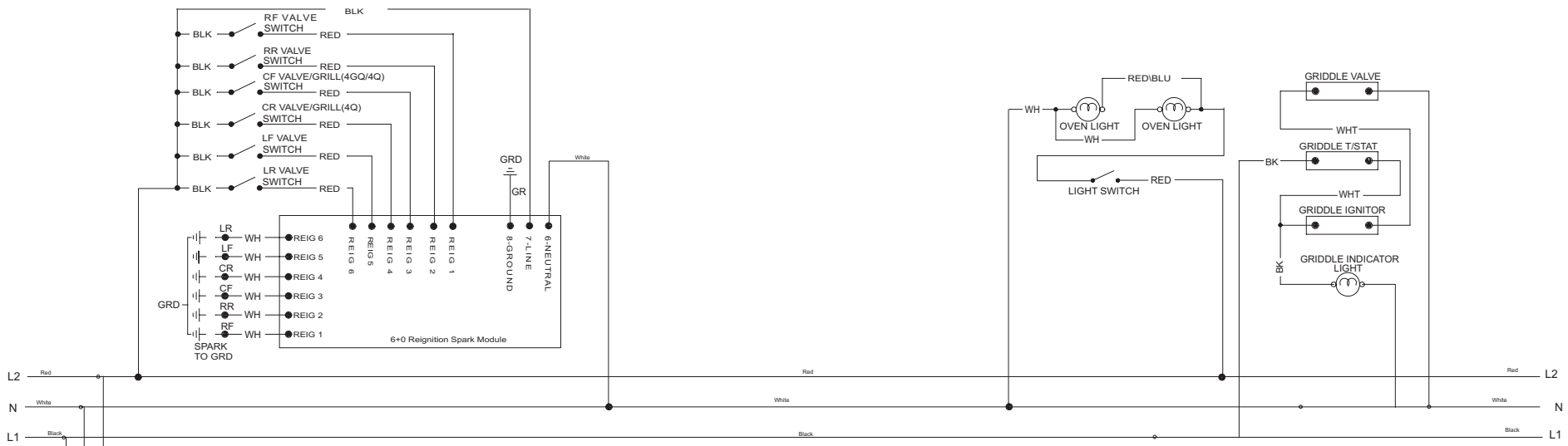

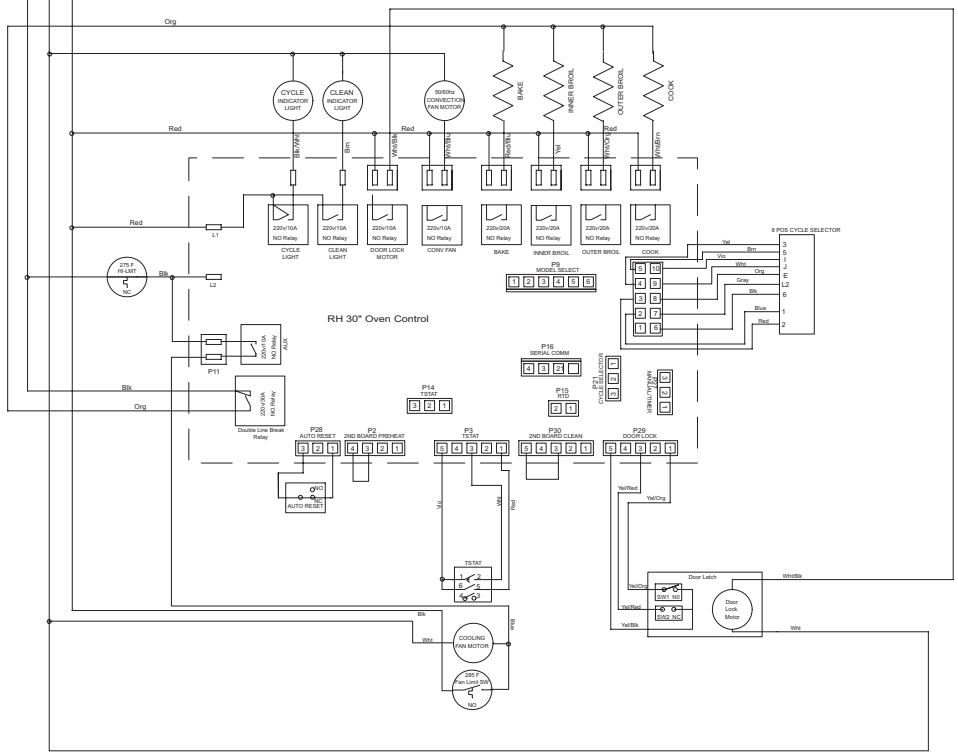

WARNING- THIS UNIT MUST BE GROUNDED.
SEE INSTALLATION INSTRUCTIONS FOR PROPER GROUNDING PROCEDURES.

CAUTION- LABEL ALL WIRES PRIOR TO DISCONNECTION WHEN SERVICING CONTROLS. WIRING ERRORS CAN CAUSE IMPROPER AND DANGEROUS OPERATION.
VERIFY PROPER OPERATION AFTER SERVICING.

REFER ONLY TO FEATURES WHICH ARE EQUIPPED WITH THIS UNIT.

WIRING DIAGRAM
VDSC367-6B